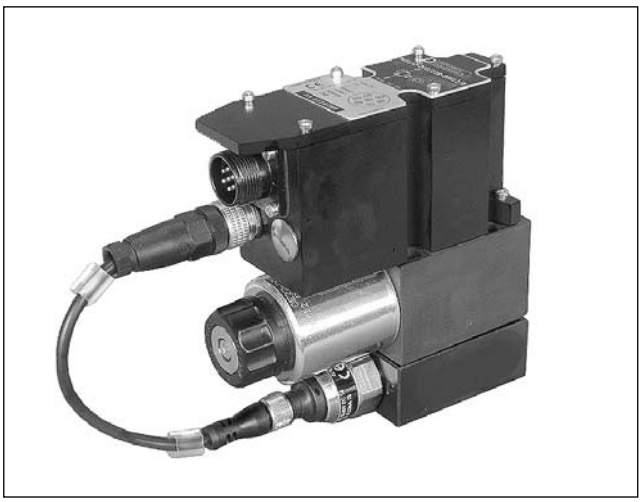

PRED3J

PRESSURE CONTROL VALVE IN CLOSED LOOP WITH DIRECT PROPORTIONAL CONTROL AND INTEGRATED ELECTRONICS

SERIES 11

SUBPLATE MOUNTING
ISO 4401-03 (CETOP 03)

p max **350** bar
Q max **5** l/min

MOUNTING INTERFACE

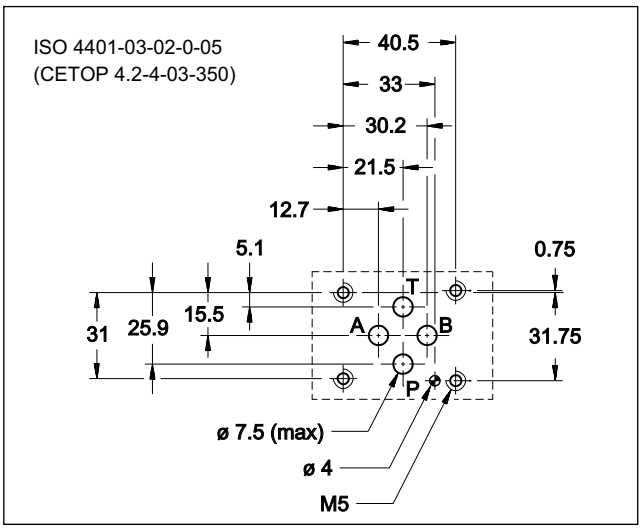

OPERATING PRINCIPLE

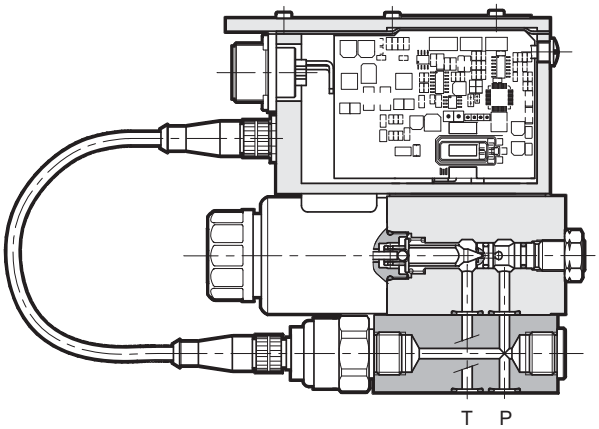

— The PRED3J valve is a direct operated pressure control valve with integrated electric proportional control and mounting interface in compliance with ISO 4401 (CETOP RP 121H) standards.

— It is suitable to pilot two-stage valves, for pressure control in hydraulic circuits.

— Pressure can be modulated continuously in proportion to the reference signal.

— The valve is controlled directly by an integrated digital amplifier (see par. 4).

— The valve is available in three pressure control ranges up to 350 bar.

PERFORMANCES

(obtained with mineral oil with viscosity of 36 cSt at 50°C and digital integrated electronics)

Maximum operating pressure: - P port - T port	bar	 350 2
Minimum controlled pressure	see p min= f(Q) diagram	
Nominal flow Maximum flow (see p min= f(Q) diagram)	l/min	1 5
Step response	see paragraph 3	
Hysteresis	% of p nom	< 1%
Repeatability	% of p nom	< ±0,5%
Electrical characteristic	see paragraph 4.3	
Ambient temperature range	°C	-20 / +60
Fluid temperature range	°C	-20 / +80
Fluid viscosity range	cSt	10 ÷ 400
Fluid contamination degree	According to ISO 4406:1999 class 18/16/13	
Recommended viscosity	cSt	25
Mass	kg	2,5

HYDRAULIC SYMBOL

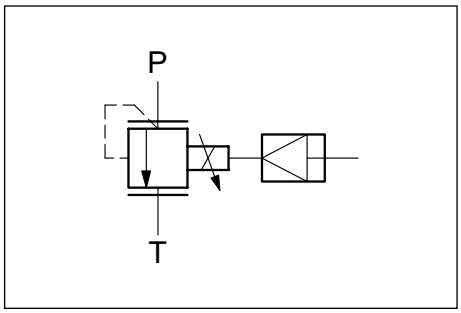

1 - IDENTIFICATION CODE

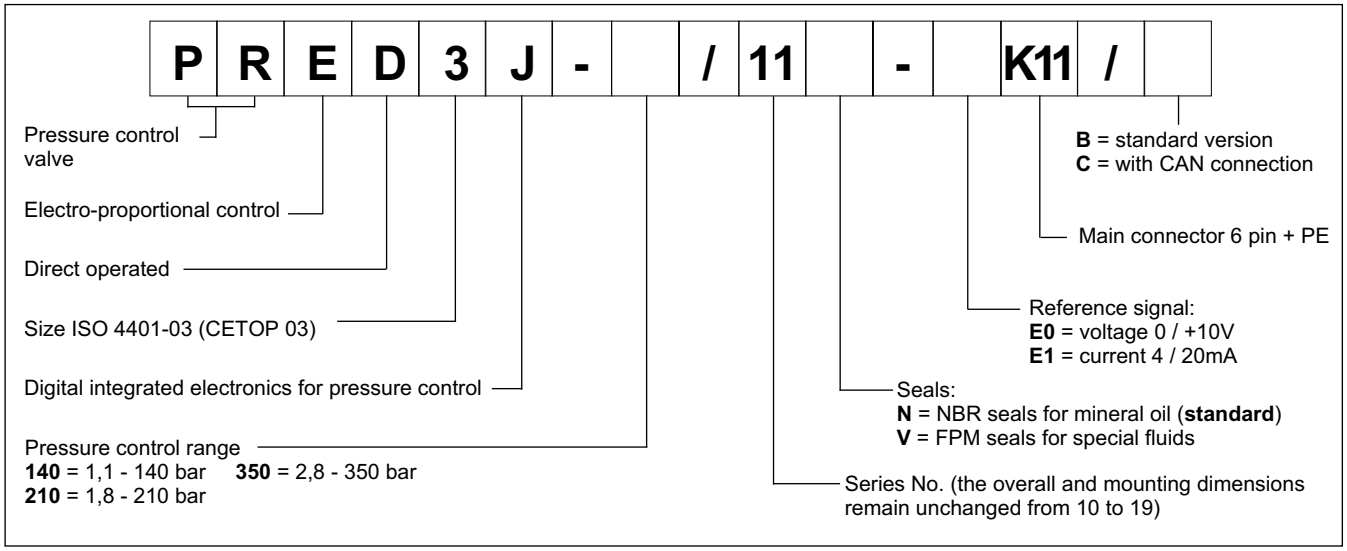

2 - CHARACTERISTIC CURVES (measured with viscosity of 36 cSt at 50°C)

Typical control curves according to the current supplied to the solenoid for pressure control ranges: 140, 210 and 350, measured with input flow rate Q = 1 l/min.
The curves are obtained after linearization in factory of the characteristic curve through the digital amplifier, and they are measured without any backpressure in T.

PRESSURE CONTROL p=f (I)

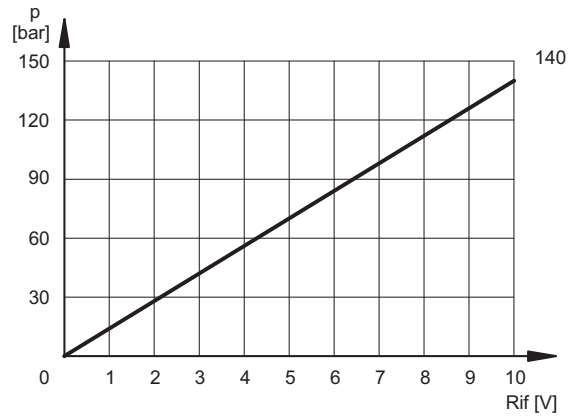

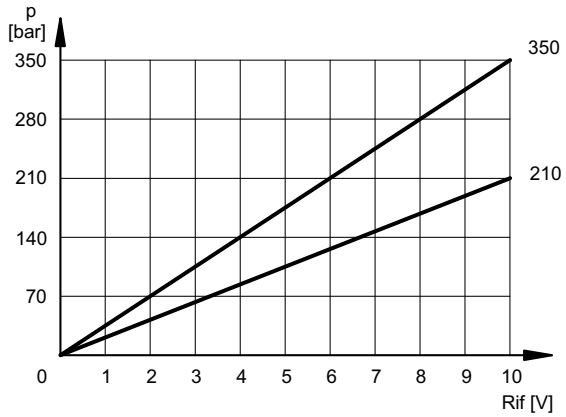

MINIMUM CONTROLLED PRESSURE pmin = f (Q)

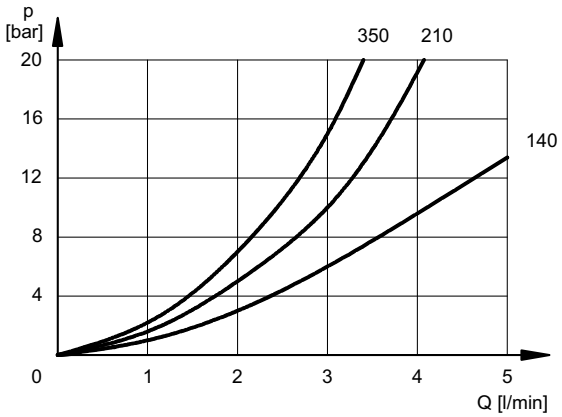

PRESSURE VARIATION pmax = f (Q)

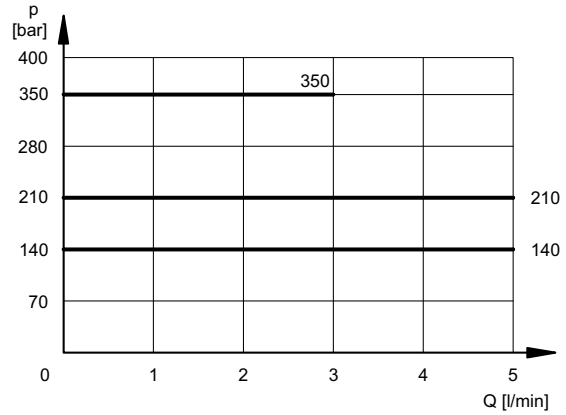

3 - STEP RESPONSE (obtained with mineral oil with viscosity of 36 cSt at 50°C and with digital integrated electronics)

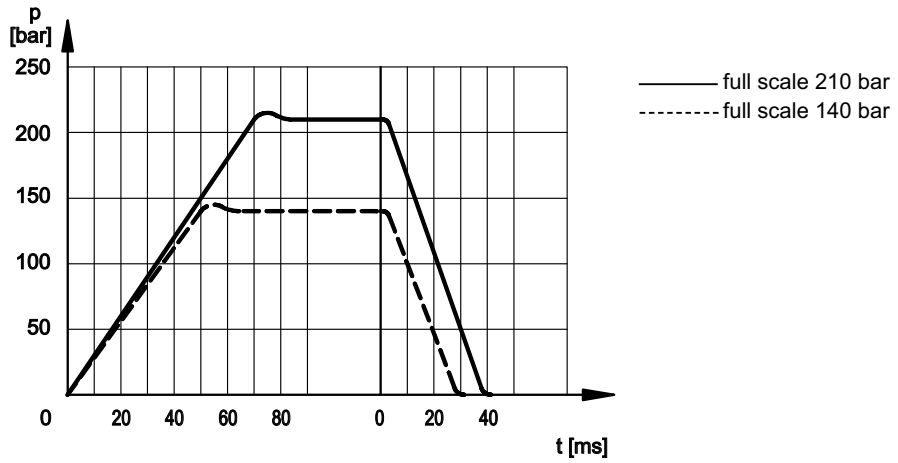

NOTE: Response times are obtained by using valves with a full scale of 140 and 210 bar, with an input flow rate of 2 l/min and a pressure oil volume of 0,5 lt. The response time is affected both by the flow rate and the oil volume in the pipework.

4 - ELECTRICAL CHARACTERISTICS

4.1 - Digital integrated electronics

The proportional valve is controlled by a digital amplifier (driver), which incorporates a microprocessor that controls, via software, all the valve functions, such as:
- continuous converting (0,5ms) of the voltage reference signal (E0) or of the current reference signal (E1) in a digital value
- generation of up and down ramps (see **NOTE**)
- gains limit (see **NOTE**)
- compensation of the dead band
- linearization of the characteristic curve
- regulation of the current to the solenoid
- dynamic regulation of PWM frequency
- protection of the solenoid outputs against possible short circuits

NOTE: these parameters can be set through the connection to the CAN connector, by means of a personal computer and relevant software (see paragraph 5.3).

The digital driver enables the valve to reach better performances compared to the analogic version, such as:

- reduced hysteresis and improved repeatability
- reduced response times
- linearization of the characteristic curve which is optimised in factory for each valve
- complete interchangeability in case of valve replacement
- possibility to set, via software, the functional parameters
- possibility to interface a CAN-Open network
- possibility to perform a diagnostic program by means of the CAN connection
- high immunity to electromagnetic troubles

4.2 - Functional block diagram

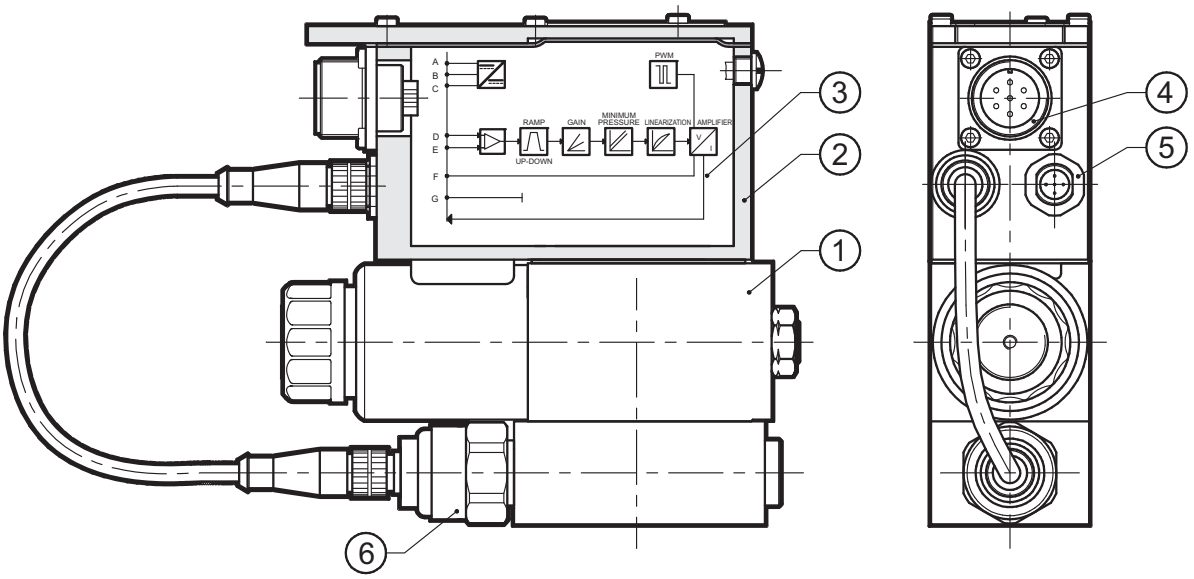

1	Valve with proportional solenoid	4	Main connector
2	Electronics envelope	5	CAN connector
3	Digital card	6	Pressure transducer

4.3 - Electrical characteristics

NOMINAL VOLTAGE	V DC	24 (from 19 to 30 VDC, ripple max 3 Vpp)
ABSORBED POWER	W	50
MAXIMUM CURRENT	A	1,88
DUTY CYCLE		100%
VOLTAGE SIGNAL (E0)	V DC	0 ÷ 10 (Impedance Ri > 50KΩ)
CURRENT SIGNAL (E1)	mA	4 ÷ 20 (Impedance Ri = 500 Ω)
ALARMS		Overload and electronics overheating
COMMUNICATION		Interface of the optoisolated industrial Field-bus type CAN-Bus ISO 11898
MAIN CONNECTOR		7 - pin MIL-C-5015-G (DIN 43563)
CAN-BUS CONNECTOR		M12-IEC 60947-5-2
ELECTROMAGNETIC COMPATIBILITY (EMC) emissions IEC EN 61000-6-4 immunity IEC EN 61000-4-2		According to 2004/108/EC standards
PROTECTION AGAINST ATMOSPHERIC AGENTS		IP65 / IP67 (IEC EN 60529 standards)

5 - OPERATING MODALITIES

The digital driver of PRED3J valve may be used with different functions and operating modalities, depending on the requested performances.

5.1 - Standard version with voltage reference signal (E0)

This is the most common version; it makes the valve completely interchangeable with the traditional proportional valves with analog type integrated electronics. The valve has only to be connected as indicated below.
This version doesn't allow the setting of the valve parameters, for example the ramps must be performed in the PLC program, as well as the reference signal limit.

Connection scheme (B version - E0)

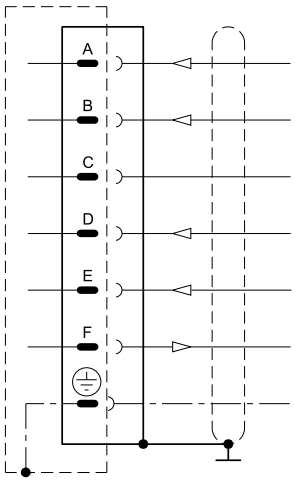

Pin	Values	Function	NOTE
A	24V DC	Voltage	from 19 to 30V DC (ripple max 3 Vpp) (see **NOTE 2**)
B	0 V	Power supply (zero)	0 V
C	----	Not used	----
D	0 ÷ 10 V	Input rated command	Impedance R_i > 50 kΩ
E	0 V	Input rated command	----
F	0 ÷ 10 V	Pressure test point	0 ÷ 100% nominal pressure (see **NOTE 1**)
PE	GND	Protective ground	----

NOTE: the pin B (0V power supply) and the pin E (0V reference signal) must be connected through a jumper and both connected to GND, electric panel side.

5.2 - Standard version with current reference signal (E1)

This version has characteristics which are similar to the previous one, with the difference that in this case the reference signal is supplied in current 4 - 20 mA. With the 4 mA signal the valve is at zero value, while with 20 mA signal the valve is at the maximum setting value.

Connection scheme (B version - E1)

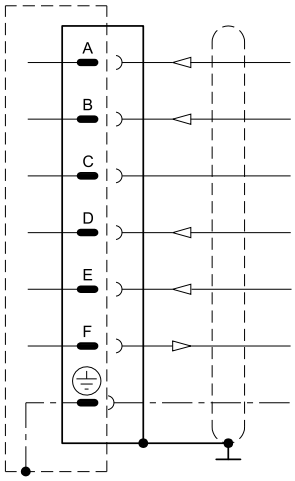

Pin	Values	Function	NOTE
A	24V DC	Voltage	from 19 to 30V DC (ripple max 3 Vpp) (see **NOTE 2**)
B	0 V	Power supply (zero)	0 V
C	----	Not used	----
D	4 ÷ 20 mA	Input signal	Impedance R_i = 500 Ω
E	0 V	Zero reference	----
F	0 ÷ 10 V	Pressure test point	0 ÷ 100% nominal pressure (see **NOTE 1**)
PE	GND	Protective ground	----

NOTE for the wiring: connections must be made via the 7-pin plug mounted on the amplifier. Recommended cable sizes are 0,75 mm^2 for cables up to 20m and 1,00 mm^2 for cables up to 40m, for power supply. The signal cables must be 0,50 mm^2 . A suitable cable would have 7 cores, a separate screen for the signal wires and an overall screen.

NOTE 1: Read the test point pin F in relation to pin B (0V).

NOTE 2: Foresee a 5A/50V fast acting external fuse on the A pin (24 V CC) in order to protect the electronics.

5.3 - Version with parameters set by means of CAN connector (version C)

This version allow to set some parameters of the valve connecting a PC to the CAN connector.
To do this, you have to order the interface device for USB port **CANPC-USB/20** (code 3898101002), complete of the configuration software, a communication cable (length 3 mt) and a hardware converter needed to connect the valve to the USB port. The software is Microsoft XP© compliant.

The parameters that can be set are described below:

Nominal pressure
The “nominal pressure” parameter sets the desired nominal pressure in bar, which the maximum reference value should be corresponding to (10 V or 20 mA).
Default value = 100% of full scale
Range: from 100% to 50% of full scale

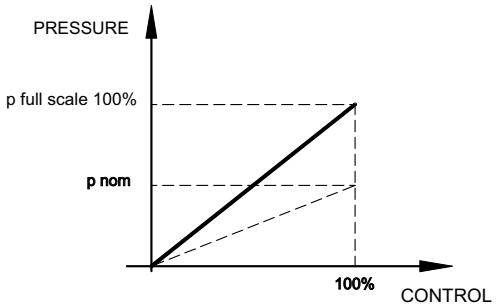

PWM Frequency
Sets the PWM frequency, which is the pulsating frequency of the control current. The PWM decrease improves the valve accuracy, decreasing the regulation stability.
The PWM increase improves the regulation stability, causing a higher hysteresis.
Default value = 300 Hz
Range 50 ÷ 500 Hz

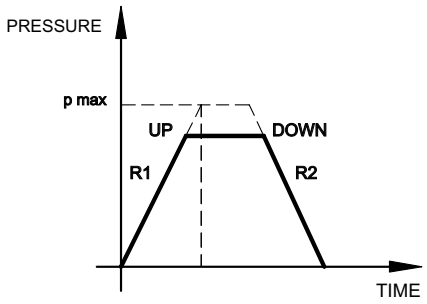

Ramps
Increase time of Ramp R1: sets the current increase time for a variation from 0 to 100% of the input reference.
Decrease time of Ramp R2: sets the current decrease time for a variation from 0 to 100% of the input reference.
Min time = 0,001 sec.
Max time = 40,000 sec.
Default time = 0,001 sec.

Diagnostics
Provides several information parameters, such as:
· The electronic driver status (Working or Broken)
· The active regulation
· Input reference
· Current value

5.4 - Version with CAN-Bus interface

This version allows the valve piloting through the industrial field bus CAN-Open, according to ISO 11898 standards.
The CAN connector must be connected (see scheme) as a slave node of the CAN-Open bus, while the main connector is wired only for the power supply (pin A and B + earth)

The most important characteristics of a CAN - Open connection are:
- Parameter storage also in PLC
- Parameters setting in real-time (PDO communication)
- On-line valve diagnostics
- Easy wiring with the serial connection
- Communication program according to international standards

For detailed information on the CAN-Open communication software, see cat. 89 800.

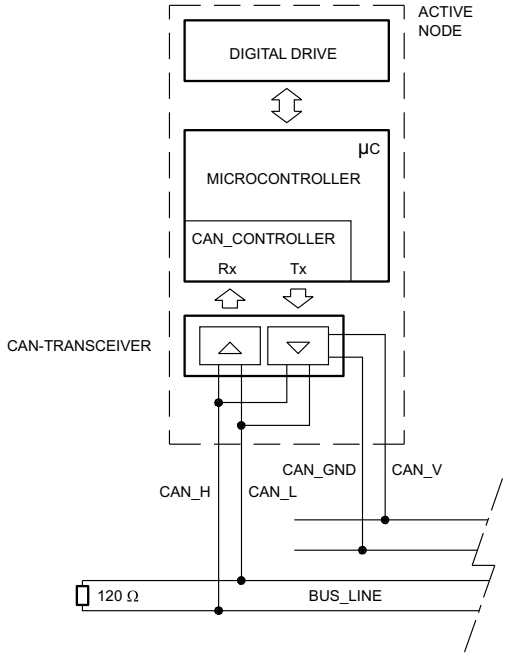

CAN connector connection scheme

Pin	Values	Function
1	CAN_SHLD	Shield
2	CAN +24V DC	BUS + 24V DC (max 30 mA)
3	CAN 0 DC	BUS 0V DC
4	CAN_H	BUS line (high signal)
5	CAN_L	BUS line (low signal)

NOTE: If the valve is the closing node of the CAN web, insert a 120 Ω resistance on the connector pins n° 4 and 5.

6 - INSTALLATION

We recommend to install the PRED3J valve either in horizontal position, or vertical position with the solenoid downward. If the valve is installed in vertical position and with the solenoid upward, you must consider possible variations of the minimum controlled pressure, if compared to what is indicated in paragraph 2.

Ensure that there is no air in the hydraulic circuit. In particular applications, it can be necessary to vent the air entrapped in the solenoid tube, by using the appropriate drain screw in the solenoid tube. Ensure that the solenoid tube is always filled with oil (see paragraph 8). At the end of the operation, make sure of having correctly replaced the drain screw.

Connect the valve T port directly to the tank. Add any backpressure value detected in the T line to the controlled pressure value. Maximum admissible backpressure in the T line, under operational conditions, is 2 bar.

Valves are fixed by means of screws or tie rods on a flat surface with planarity and roughness equal to or better than those indicated in the relative symbols. If minimum values are not observed, fluid can easily leak between the valve and support surface.

7 - HYDRAULIC FLUIDS

Use mineral oil-based hydraulic fluids HL or HM type, according to ISO 6743-4. For these fluids, use NBR seals. For fluids HFDR type (phosphate esters) use FPM seals (code V).
For the use of other kinds of fluid such as HFA, HFB, HFC, please consult our technical department. Using fluids at temperatures higher than 80 °C causes a faster degradation of the fluid and of the seals characteristics.
The fluid must be preserved in its physical and chemical characteristics.

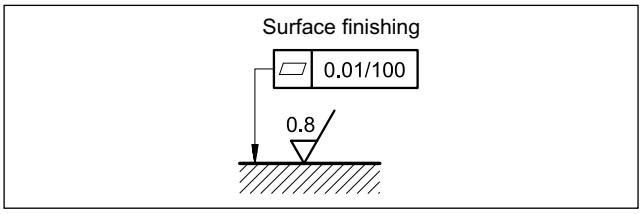

8 - OVERALL AND MOUNTING DIMENSIONS

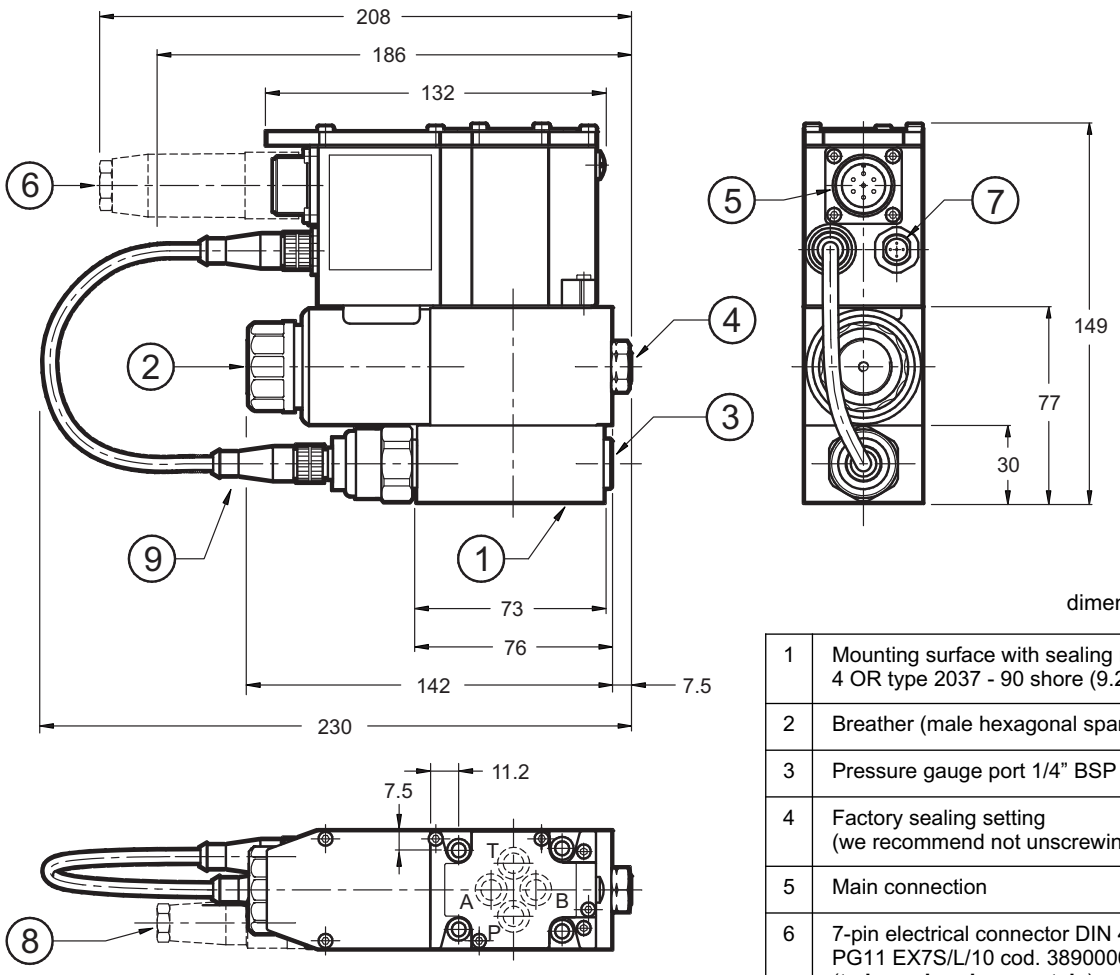

dimensions in mm

1	Mounting surface with sealing rings: 4 OR type 2037 - 90 shore (9.25 x 1.78)
2	Breather (male hexagonal spanner 4)
3	Pressure gauge port 1/4” BSP
4	Factory sealing setting (we recommend not unscrewing the nut)
5	Main connection
6	7-pin electrical connector DIN 43563 - IP67 PG11 EX7S/L/10 cod. 3890000003 (**to be ordered separately**)
7	**for version C only**: CAN-Bus connection
8	**for version C only:** Electrical connector 5 pin M12 - IP67 PG7 EC5S/M12L/10 code 3491001001 (**to be ordered separately**)
9	Cable with connectors for pressure feedback

Fastening bolts: 4 bolts M5x60

Torque: 5 Nm

NOTE: at the first start up, or after a long period of no use, it is necessary to vent the air through the breather (2) placed at the end of the solenoid tube.

9 - SUBPLATES (see catalogue 51 000)

PMMD-AI3G rear ports
PMMD-AL3G side ports
Ports dimensions: P, T, A, B: 3/8” BSP

DUPLOMATIC OLEODINAMICA

DUPLOMATIC OLEODINAMICA S.p.A.
20015 PARABIAGO (MI) • Via M. Re Depaolini 24
Tel. +39 0331.895.111
Fax +39 0331.895.339
www.duplomatic.com • e-mail: sales.exp@duplomatic.com

REPRODUCTION IS FORBIDDEN. THE COMPANY RESERVES THE RIGHT TO APPLY ANY MODIFICATIONS.