EWM-2SS-DAD

CARD FOR 2 AXES POSITIONING AND SYNCHRONIZATION IN CLOSED LOOP CONTROL. EMBEDDED PROFIBUS INTERFACE

SERIES 20

RAIL MOUNTING TYPE: DIN EN 50022

OPERATING PRINCIPLE

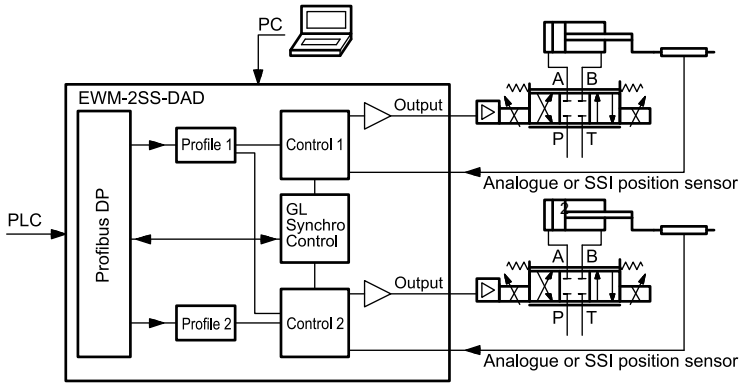

- The EWM-2SS-DAD card is designed for controlling the stroke position of 2 axes
- Additionally, the synchronized control of the axes is available
- Both SSI or analogue sensor input are available
- The module communicates with the PLC via the embedded Profibus interface
- Card configuration is made via software, via USB

TECHNICAL CHARACTERISTICS

Power supply	V DC	24 (±10%)
Fuse, external	A	1A medium time lag
Current consumption	mA	< 500
Command position value		via Profibus DP
Profibus DP data rate	kbit/s	9.6, 19.2, 93.75, 187.5, 500, 1500, 3000, 6000, 12000 - ID number 1810h
Max position accuracy	µm	1
Feedback values	SSI V mA	digital sensor with any interface SSI - 150 kbit/s 4 ÷ 20 (RI = 250 Ω) 0 ÷ 10 (RI = 33 kΩ)
Output value - voltage - current	V mA	±10 differential (max load 5 mA) 4 ÷ 20 (max load 390 Ω)
Resolution of output value	%	0.024
Interface		USB B type 2.0 , Profibus
Electromagnetic compatibility (EMC):		Immunity EN 61000-6-2: 8/2002 - Emissions EN 61000-6-4: 6/2005
Housing material		thermoplastic polyamide PA6.6 combustibility class V0 (UL94)
Housing dimensions	mm	121(d) x 99(h) x 68(w)
Connectors		11x4 poles screw terminals PE direct via DIN rail USB-B 2.0 - Profibus D-Sub 9 poles
Operating temperature range	°C	-10 / +50
Protection degree		IP 20

1 - IDENTIFICATION CODE

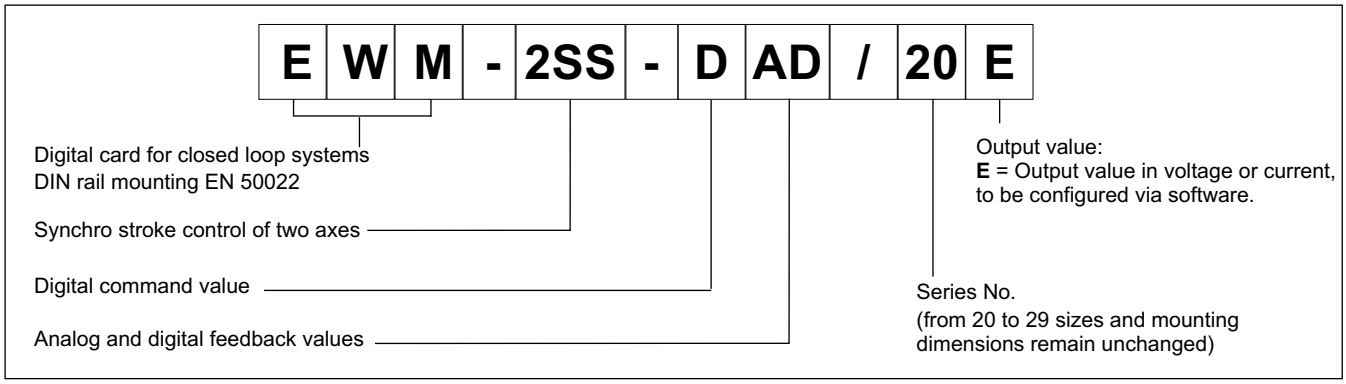

2 - FEATURES OVERVIEW

Controller Functions

- Synchronized or independent positioning control of two axes in closed loop
- Command position, speed parameters and actual value response via Profibus DP
- Fine positioning - 1µm resolution
- 2 methods for positioning control:
  SDD – Stroke Depending Deceleration - time-optimal positioning structure with very high stability
  NC – Numerically Controlled - To follow the position profile
- 2 methods for synchronized control:
  Master-slave
  Average value controller
- Data for lengths in mm
- Digital SSI sensor
- As an alternative, the card can be set via software for operate with analogue position sensors
- Analogue sensors scalable via software
- Gain adjustment made via software with independent parameters for SDD and NC modes
- PT1 compensator for optimized control of hydraulic drives
- Emergency function (EOUT)
- Safe and error-free data transmission
- Manual mode available via Profibus.

Adaptation of the valve characteristic curve

- CTRL function to adapt the braking characteristics to positive and zero overlapped proportional valves
- Advanced deadband compensation: non-linearity compensation by a double-gain characteristics

Monitoring functions

- In-position error
- Cable break, in-pressure error and fault of feedback sensors
- 2 Digital output to read the status

Other characteristics

- Card configuration is made via software, USB-B socket on the module

3 - FUNCTIONAL SPECIFICATIONS

3.1 - Power supply

This card is designed for 24 VDC of a power supply. This power supply must correspond to the existing EMC standards.

All inductivity at the same power supply (relays, valves) must be provided with an over voltage protection (varistors, freewheeling diodes).

It is recommended to use a regulated power supply (linear or switching mode) for the card supply and for the sensors.

3.2 - Electrical protections

All inputs and outputs are protected with suppressor diodes and RC-filters against transient overshoots.

3.3 - Digital Input

The card accepts digital input. The digital input must have a voltage from 12 to 24 V; Low level: <2V, high level >10V. Input resistance 25 kΩ. See the block diagram at paragraph 4 for the electric connections.

3.4 - Reference signal

The reference signals run via Profibus, ID number 1810h.

3.5 - Position feedback values

The card accepts a digital feedback input from a sensor with any SSI interface with RS422 specifications. Bit, code and resolution are settable via software.

Use SSI sensors with the same resolution (max 1 µm)

Eventually an analogue input could be used as feedback. The card accepts a 0 ÷ 10 V (Ri 33 kOhm) or 4 ÷ 20 mA (Ri = 250 Ohm).

The analogue resolution is of 0,01 % incl. oversampling.

⚠ Using analog sensors, the SSI parameters in the software assume default preset values that the user must do not change.

3.6 - Output values

Output values can be in voltage or current and need to be configured via software (SIGNAL parameter).

voltage : ± 10 V Differential output		PIN 15 and 16 PIN 19 and 20
current:	4 ÷ 20 mA	PIN 15 to PIN 12 PIN 19 to PIN 18.

3.7 - Digital Output

Two digital output are available, STATUS and READY, that are displayed by LED on the front panel.

Low level < 2 V High Level > = Vsupply (max current 50 mA).

4 - WIRING DIAGRAM

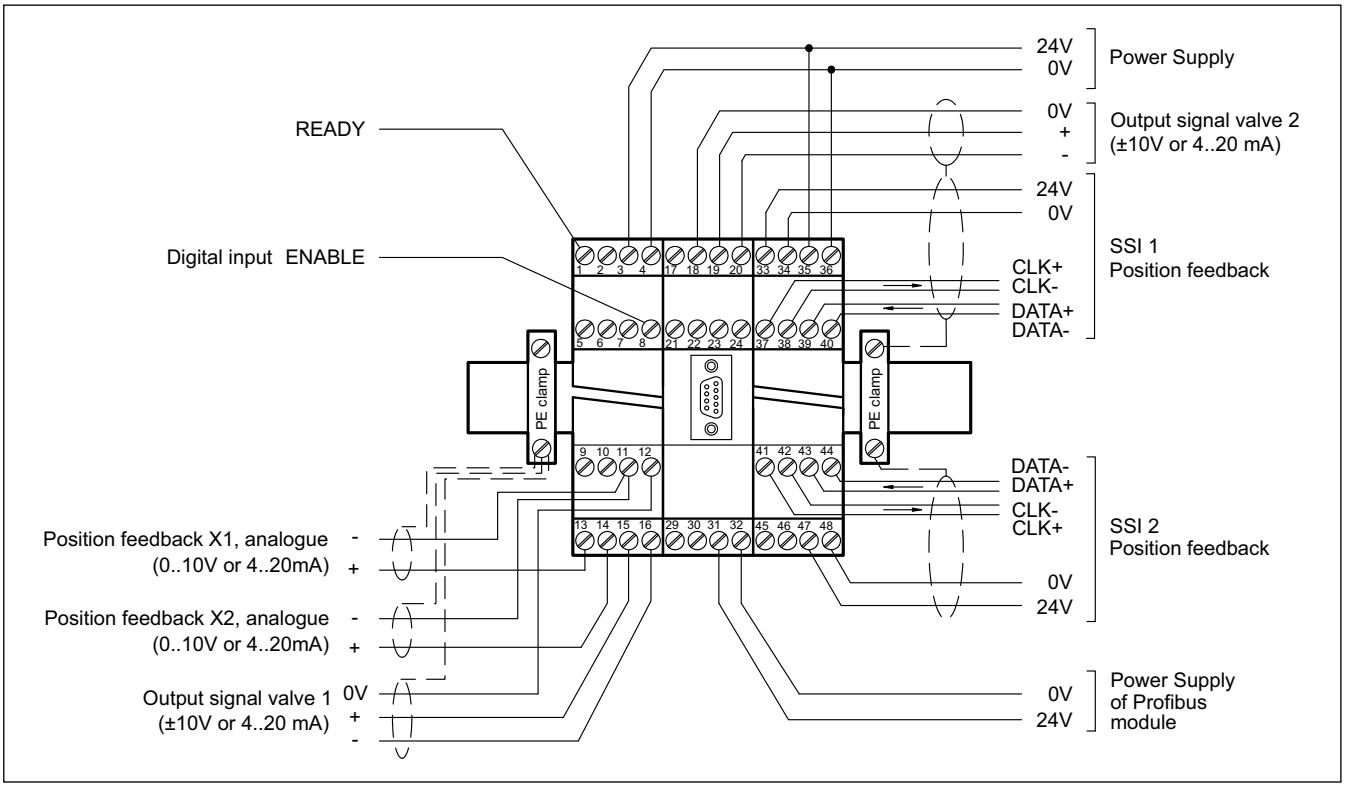

DIGITAL INPUT AND OUTPUT

PIN 1 — READY output.
General operationality, It's on when ENABLE (PIN 8 and profibus bit) is active and there are no sensor errors.
This output corresponds with the green led.

PIN 8 — ENABLE input:
This digital input signal initializes the application.
The controller and the READY signal are activated. The output signal to the control element is enabled.
Target position is set to actual position and the drive stays stationary, in closed loop.
The Enable bit via profibus must be active, too.

ANALOGUE INPUT

PIN 13 — Analogue position feedback value (X1), range 0 ÷ 100% corresponds to 0 ÷ 10V or 4 ÷ 20 mA

PIN 14 — Analogue position feedback value (X2) , range 0 ÷ 100% corresponds to 0 ÷ 10V or 4 ÷ 20 mA

ANALOGUE OUTPUT

voltage

PIN 16/15 — Differential output (U1)
± 100% corresponds to ± 10V differential voltage

PIN 29/20 — Differential output (U2)
± 100% corresponds to ± 10V differential voltage

current

PIN 12/15 — current output U1: ±100% corresponds to 4 ÷ 20 mA

PIN 18/19 — current output U2: ±100% corresponds to 4 ÷ 20 mA

SSI SENSOR INTERFACE

	position 1		position 2
PIN 37	CLK+ output	PIN 41	CLK+ output
PIN 38	CLK- output	PIN 42	CLK- output
PIN 39	DATA+ input	PIN 43	DATA+ output
PIN 40	DATA- input	PIN 44	DATA- output
PIN 33	24V Power supply of the SSI sensor	PIN 47	24V Power supply of the SSI sensor
PIN 34	0V Power supply of the SSI sensor	PIN 48	0V Power supply of the SSI sensor

5 - INSTALLATION

For power supply and solenoid connections are recommended cable sections of 0.75 mm^2 up to 20 m length, and of 1.00 mm^2 up to 40m length.

For other connections use cables with a shielded jacket, connected to GND only on the card side.

NOTE : To observe EMC requirements it is important that the control unit electrical connection is in strict compliance with the wiring diagram.

As a general rule, the valve and the electronic unit connection wires must be kept as far as possible from interference sources (e.g. power wires, electric motors, inverters and electrical switches).

Complete protection of the connection wires can be requested in environments with critical electromagnetic interferences.

5.1 Start-up

The module must be mounted and wired with attentions to EMC requirements. A star orientated ground connection should be used when other power consumers are sharing the same power supply. Following points have to be taken in account for wiring:

- Signal cable and power cable have to be wired separately.
- Analogue signal cables must be shielded.
- Other cables should be shielded in case of strong electrical disturbance (power relays, frequency controlled power driver) or at cable lengths > 3m.

With high frequency EMI inexpensive ferrite elements can be used.

Take in account a separation between the power part (and power cables) and signal part when arrange the areas inside the electrical cabinet. Experience shows us that the area next to the PLC (24 V area) is suitable.

Low impedance between PE “protected earth” and DIN-Rail should be used. Transient interference voltages at the terminals are discharged via DIN-Rail to the local PE. The screens have to be connected directly next to the module via PE terminals.

The power supply should be carried out voltage regulated (i. e. PWM controlled). The low impedance of controlled power supplies facilitates improved interference damping, therefore the signal resolution will be increased.

Switched inductance (relays and solenoids) operating from the same power supply has to be damped by surge protection elements directly by the inductance.

5.2 - Profibus DP interface

Profibus has to be used to control the axis and can also be utilized to set the parameters.

The module supports all baud rates from 9,6 kbit/s up to 12000 kbit/s with auto detection of the baud rate.

The functionality is defined in IEC 61158. The Profibus address can be programmed using the EWMPC/20 or online via the Profibus.

A diagnostic LED indicates the online status.

5.2.1 - Installation and setting

A typical screened Profibus plug (D-Sub 9pol with switchable termination) is mandatory. Every Profibus segment must be provided with an active bus termination at the beginning and at the end. The termination is already integrated in all common Profibus plugs and can be activated by DIL switches.

The Profibus cable must be screened at determined contact clips in the Profibus plug.

The GSD data configuration files are available for download on our website. The communication parameters are 16 bytes (8 words) for IN/OUT variables.

6 - DEVICE SETUP

Card set-up is possible via software only.

The system can be controlled in open loop, moving up and down the servo-cylinder with commands HAND:x, via Profibus only, to facilitate the adjustment of the card and its calibration.

6.1 - Software EWMPC/20

The software EWMPC/20 can be easily downloaded from the Duplomatic Oleodinamica website in the section SOFTWARE DOWNLOAD.

To connect the card to a PC or notebook is necessary a standard USB 2.0 cable A – B (standard USB printer cable).

Once connected, the software automatically recognises the card model and shows a table with all the available commands, their parameters, the default setting, the measuring unit and a brief explanation for correct set-up.

Some functions like baud rate setting, remote control mode, saving of process data for later evaluation are used to speed up the installation procedure.

The software is compliant with Microsoft OS Windows 7, 8 and 10.

WARNING! For card series 20, the default baud rate to select in the software has changed from 9600 baud to 57600 baud. This is adaptable in OPTION / SETTINGS / INTERFACE.

6.2 - Parameters table

The parameters table is available in English or German. The language is set in the parameters.

The parameter setting can be done at *standard* level, easier, or *expert*, where a greater number of parameters is displayed and can be customized.

For a complete list of the parameters and their settings please refer to the Technical Manual *89470 ETM*.

7 - MAIN FEATURES

The EWM-2SS-DAD is a card for positioning control loop

With only few parameters the controller can be optimized and the movement profile is preset via Profibus (position and velocity).

7.1 - Sequence of the positioning

The positioning is controlled via Profibus.

You can switch from the positioning in closed loop to the manual movement in open loop and back via Profibus.

With READY active the system is ready. The open loop control is achieved by using the HAND bits and the speed parameter. When the bit HAND goes low the card assumes the current position as the request and the card is ready to work in closed loop.

With also START bit enabled, the command position parameter (profibus) become active and the new command position will be taken over as a new target.

The axis moves immediately to this new position and indicates on the POSWIN status bit when it reaches the position. This output is active as long as the axis is within the InPos window or the START bit is active.

Setting the synchronous bit (SC) will synchronize both axes and the synchronization controller will work according with the FUNCTION mode selected (Master-slave, Average or Multiplicative Recursive Controller). Axis 2 is now following axis 1 according to the master-slave-principle.

flow (volume) P→A and B→T

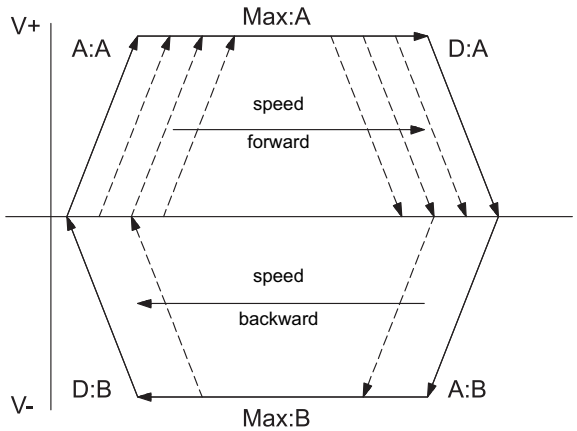

Two methods for positioning are available:

SDD - stroke depending deceleration - means the control gain will be adjusted. This is a time-optimal positioning structure with very high stability.

NC mode - the position value is generated from the following error.

The actuator position is measured by a transducer and compared with a specified target position. The target position and speed are set by Profibus.

The positioning accuracy will almost be limited by the resolution of the transducer, and by the right size of the hydraulic valve. Therefore, the correct valve selection is the most important point. Additionally, two clashing requirements (short positioning time and high accuracy) have to be considered in the system design.

7.2 - Emergency Output (EOUT)

This function is able to set the output at a specific value when a failure occurs (e.g. sensor error or ENABLE disabled). It can be used to move the axis to one of the two end positions with a programmed velocity. The function can be deactivate. Different parameters available for each axes.

7.3 - Adaptation of the braking characteristic to the valve type (CTRL).

The deceleration characteristic is set with this parameter. In case of positively overlapped proportional valves the SQRT function should be used. The non-linear flow function of these valves is linearized by the SQRT function.

In case of zero lapped valves (control valves and servo valves) the LIN or SQRT1 function should be used regardless of the application. The progressive characteristic of the SQRT1 function has better positioning accuracy but can also lead to longer positioning times in individual cases.

Different parameters available for each axes.

LIN: Linear deceleration characteristic (gain is increased by a factor of 1).

SQRT1: Root function for braking curve calculation. The gain is increased by a factor of 3 (in the target position). This is the default setting.

SQRT2: Root function for braking curve calculation. The gain is increased by a factor of 5 (in the target position). This setting should only be used with a significantly progressive flow through the valve.

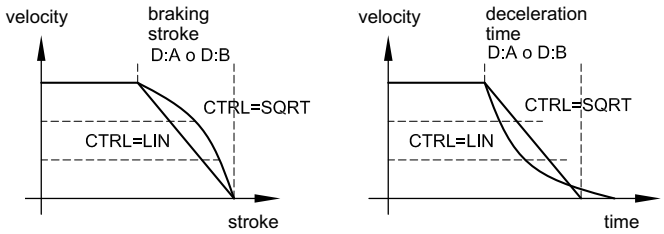

7.4 - Adaptation of the output signal to the valve characteristic (TRIGGER).

With TRIGGER command, the output signal is adapted to the valve characteristics.

The positioning controllers have a double-gain characteristic curve instead of a typical overlapped jump. The advantage is a better and more stable positioning behaviour. With this compensation, non-linear volume flow characteristic curves can be adjusted too.

If there exist also possibilities for adjustments at the valve or at the valve electronics, it has to be guaranteed, that the adjustment has to be carried out either at the power amplifier or at the positioning module.

If the deadband compensation value (MIN) is set too high, it influences the minimal velocity which cannot be adjusted any longer.

In extreme cases this causes to an oscillating around the closed loop controlled position.

Different parameters available for each axes.

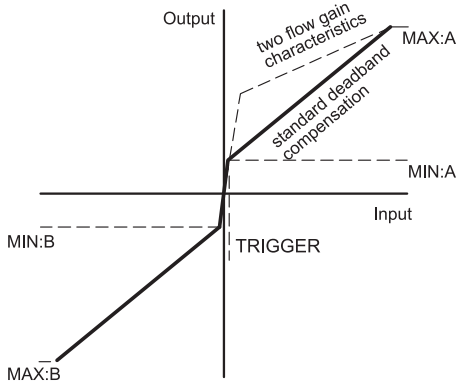

8 - CARD BLOCK DIAGRAM

Caution!, PIN 4 is connected internally to PIN 11 (and also possibly to PIN 12 depending on the model). These connections serve as a reference potential for the analogue sensor or demand value signals.

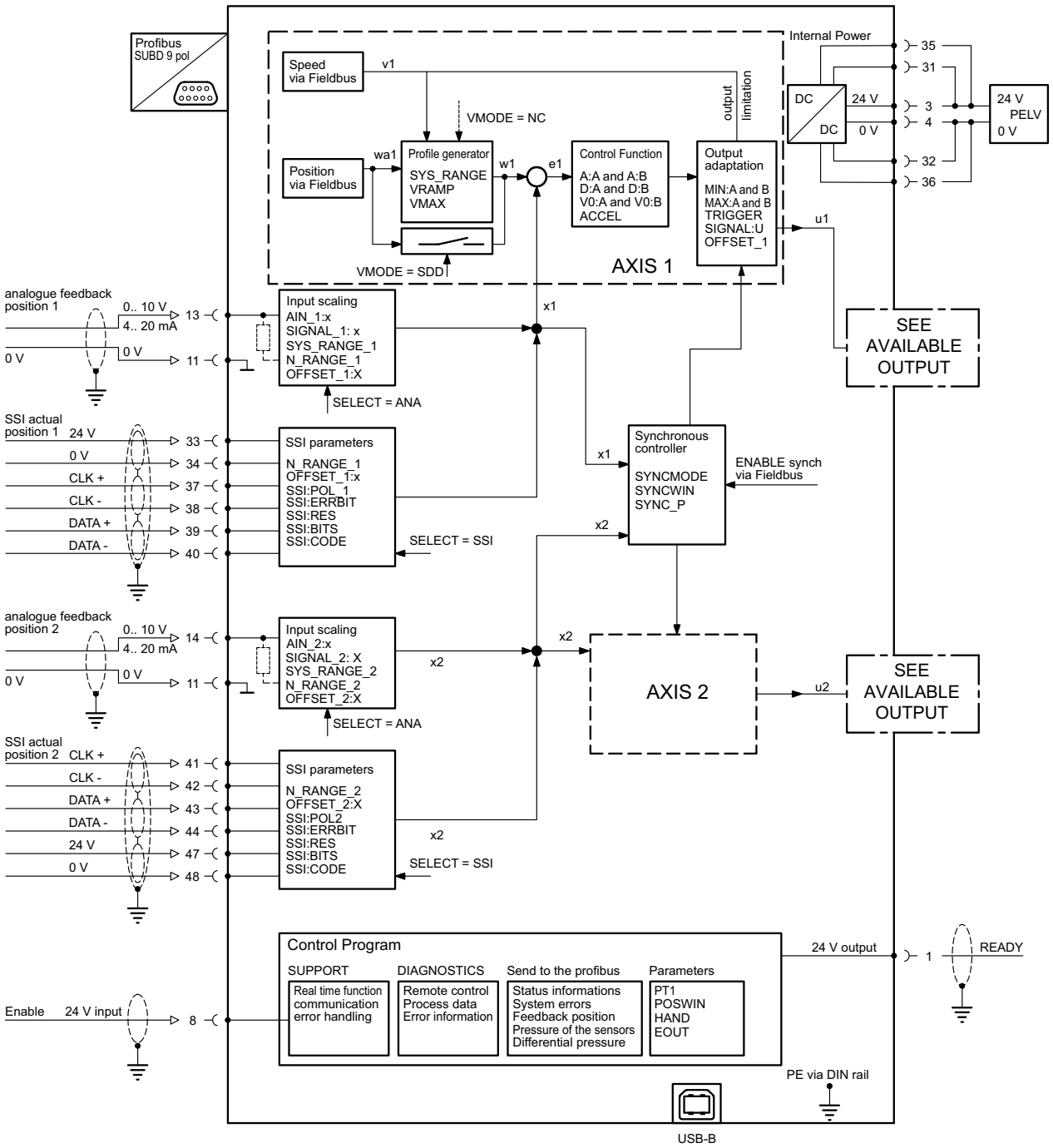

voltage

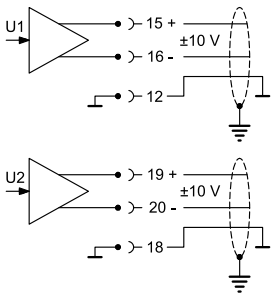

current

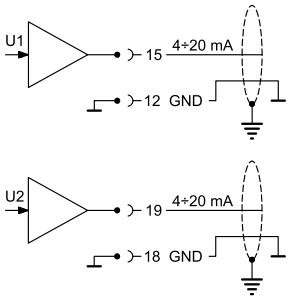

9 - OVERALL AND MOUNTING DIMENSIONS

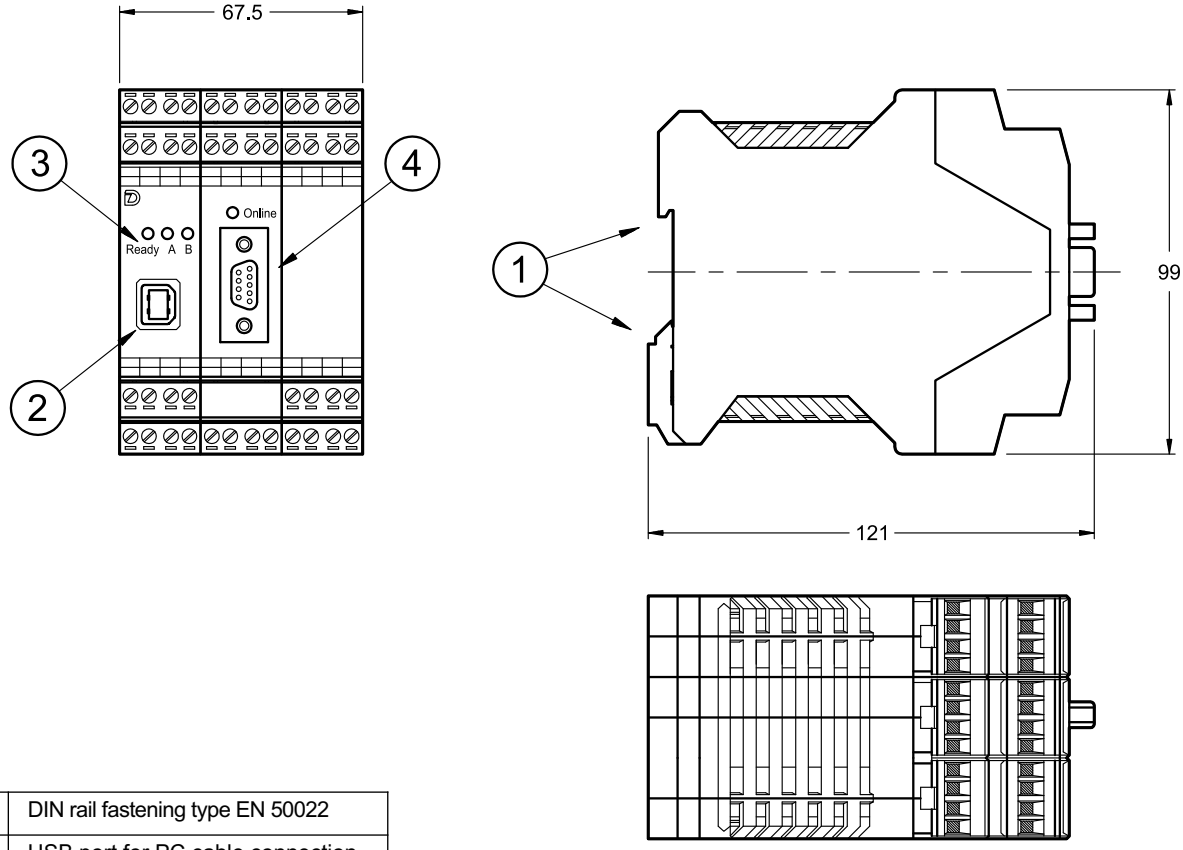

1	DIN rail fastening type EN 50022
2	USB port for PC cable connection
3	LED for output signals
4	Profibus interface port

DUPLOMATIC OLEODINAMICA

DUPLOMATIC OLEODINAMICA S.p.A.
20015 PARABIAGO (MI) • Via M. Re Depaolini 24
Tel. +39 0331.895.111
Fax +39 0331.895.339
www.duplomatic.com • e-mail: sales.exp@duplomatic.com

REPRODUCTION IS FORBIDDEN. THE COMPANY RESERVES THE RIGHT TO APPLY ANY MODIFICATIONS.